KOYO - PA010208 - RAD. TOYOTA SUPRA (3.0 TURBO) AUT. '88-89
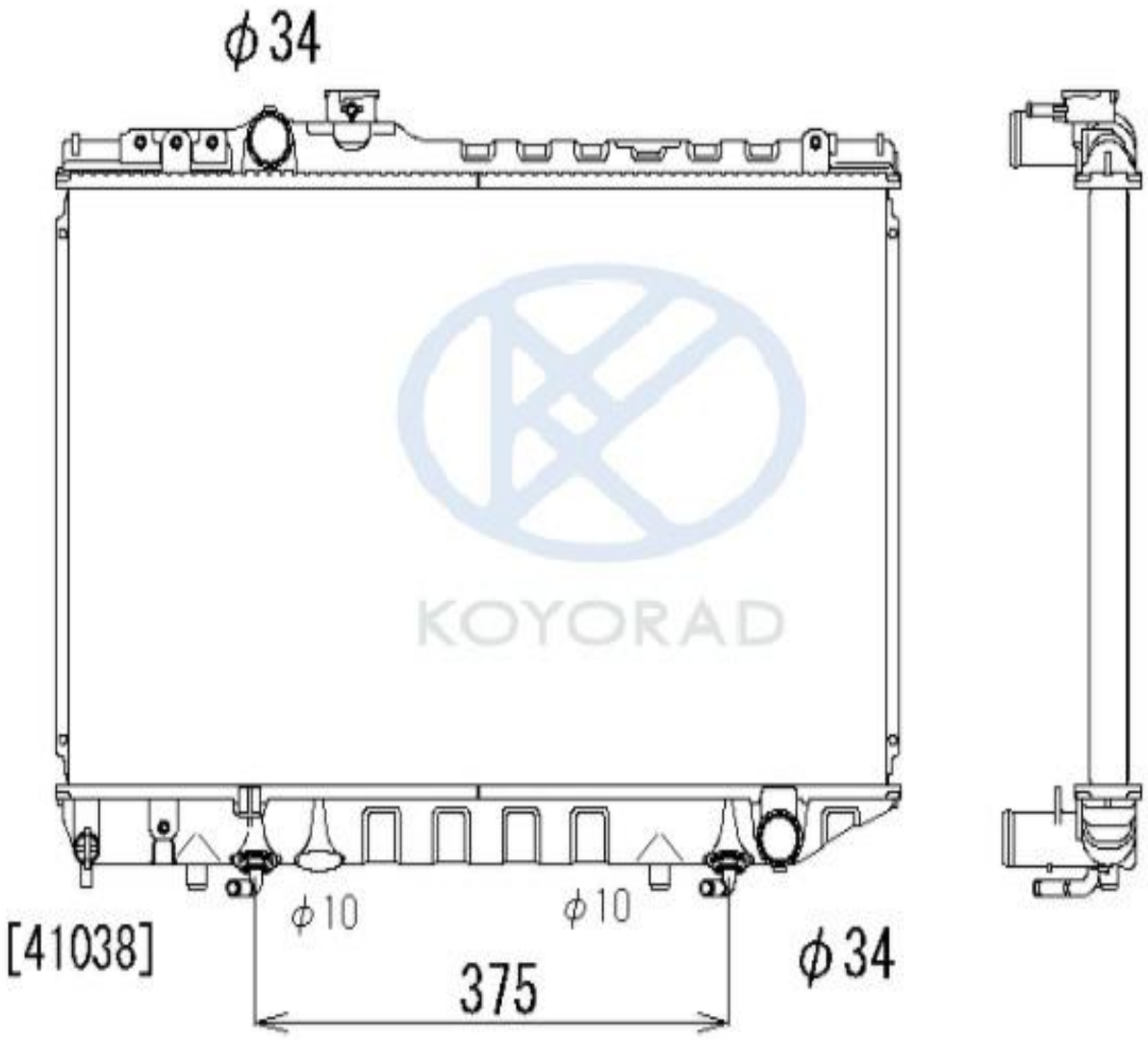
1640042200 / 1640042141 / 1640042130 / 1640042240