AVA QUALITY - VO2127 - RADIADOR VOLVO S40-V40 1.9DI

8601842

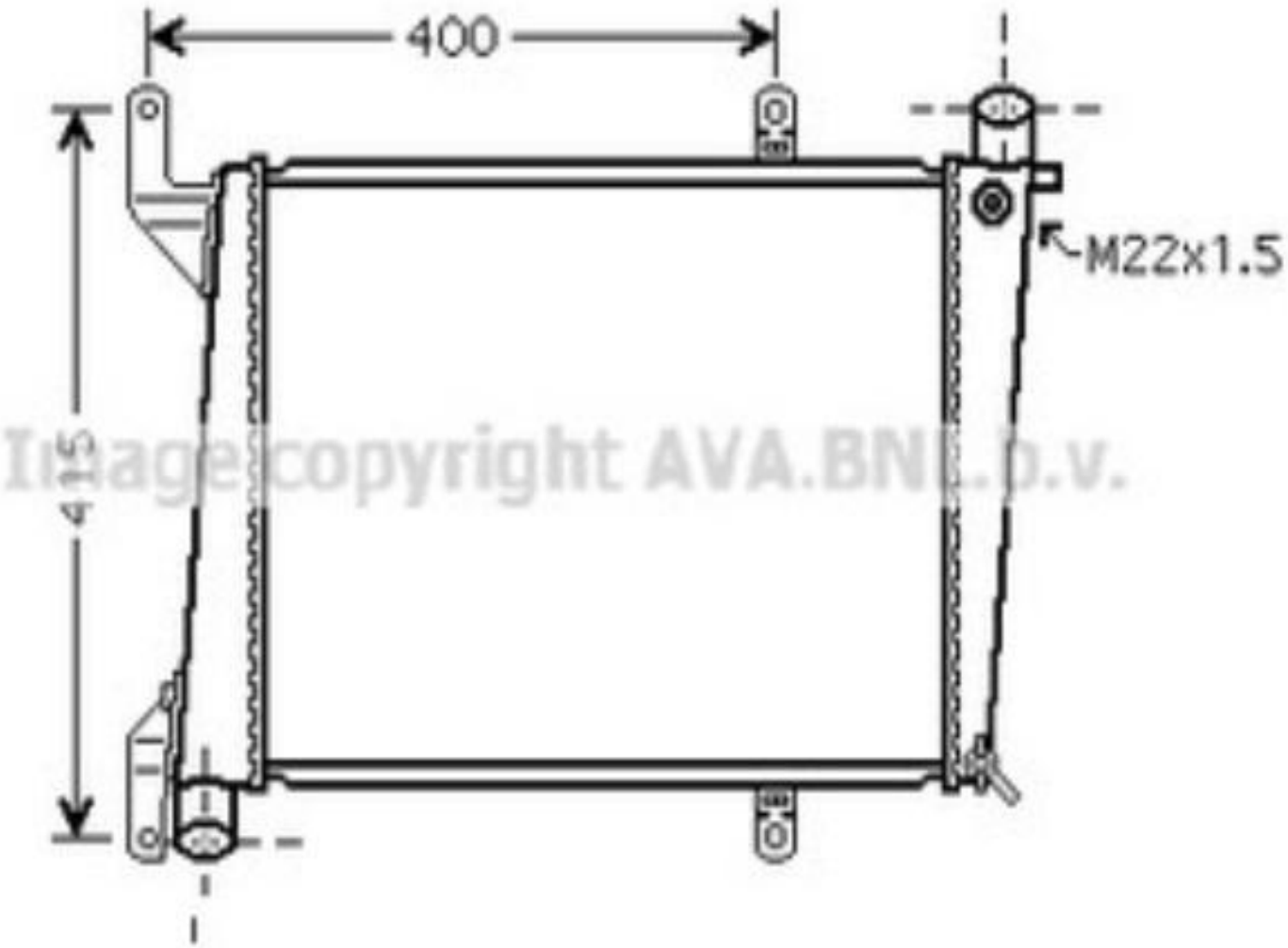

Image copyright AVA.BNL.b.v.