VALEO - 817555 - INTERCOOLER VW NEW BEETLE
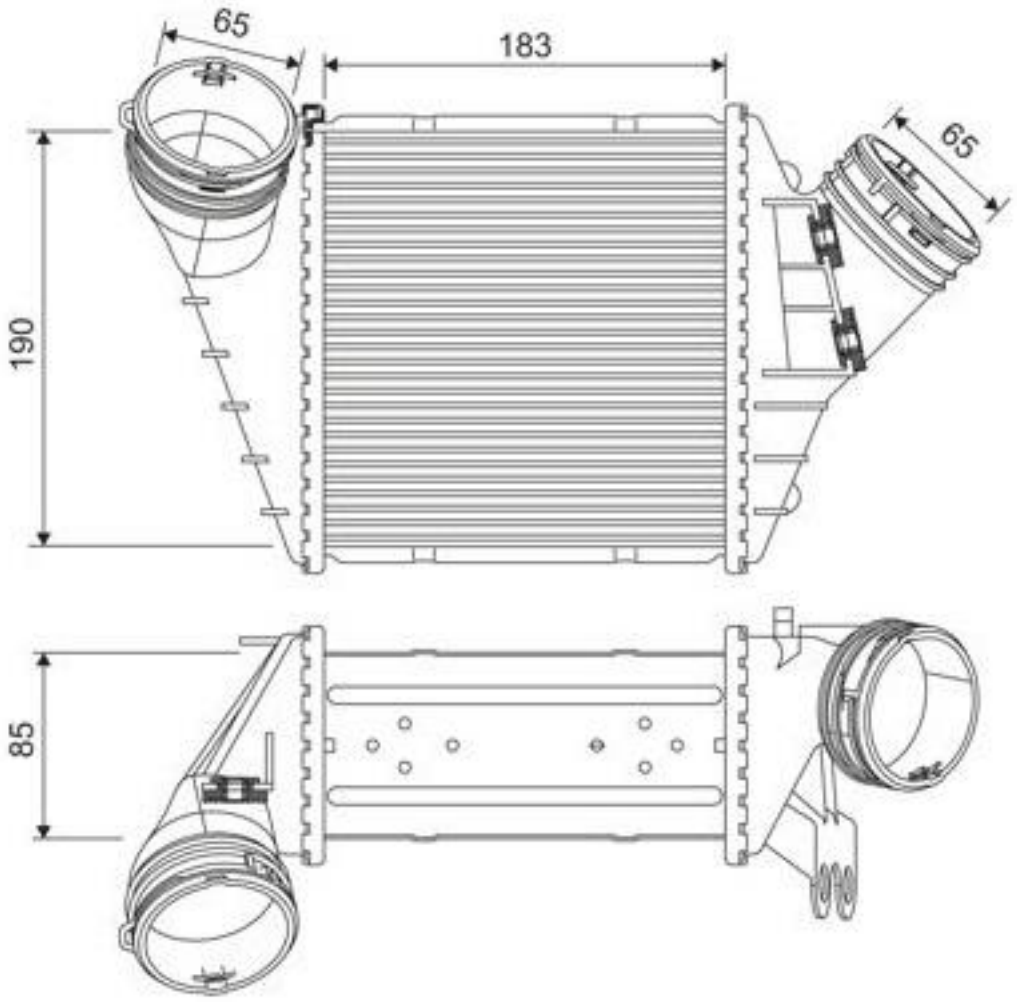
1C0145803D 1C0145803G