R.D. - SZ076 - RADIADOR SUZUKI CARRY
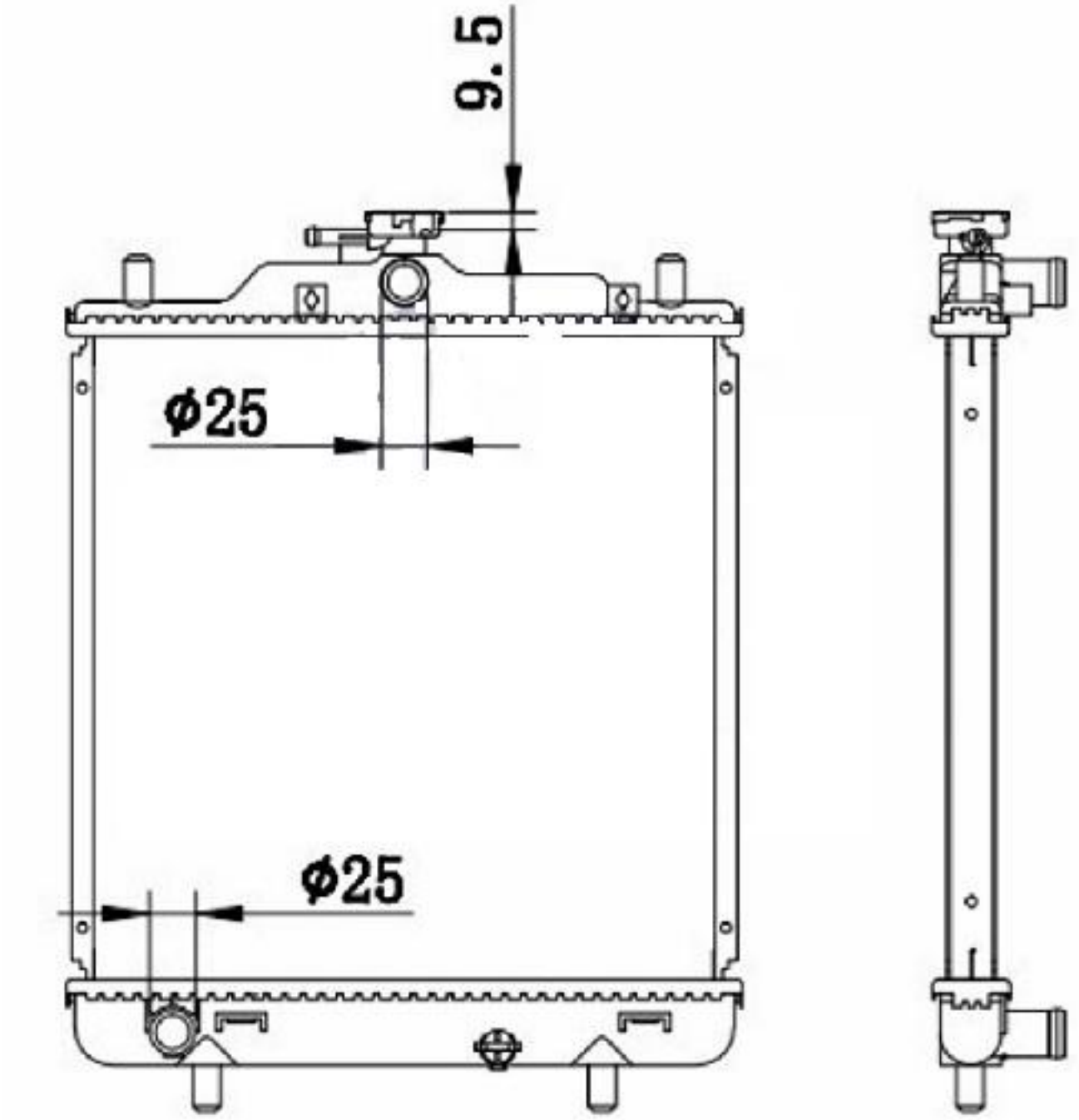
1770060H50 1770078A50 SZ2076