R.D. - MT557 - RADIADOR MITSUBISHI COLT/LANCER
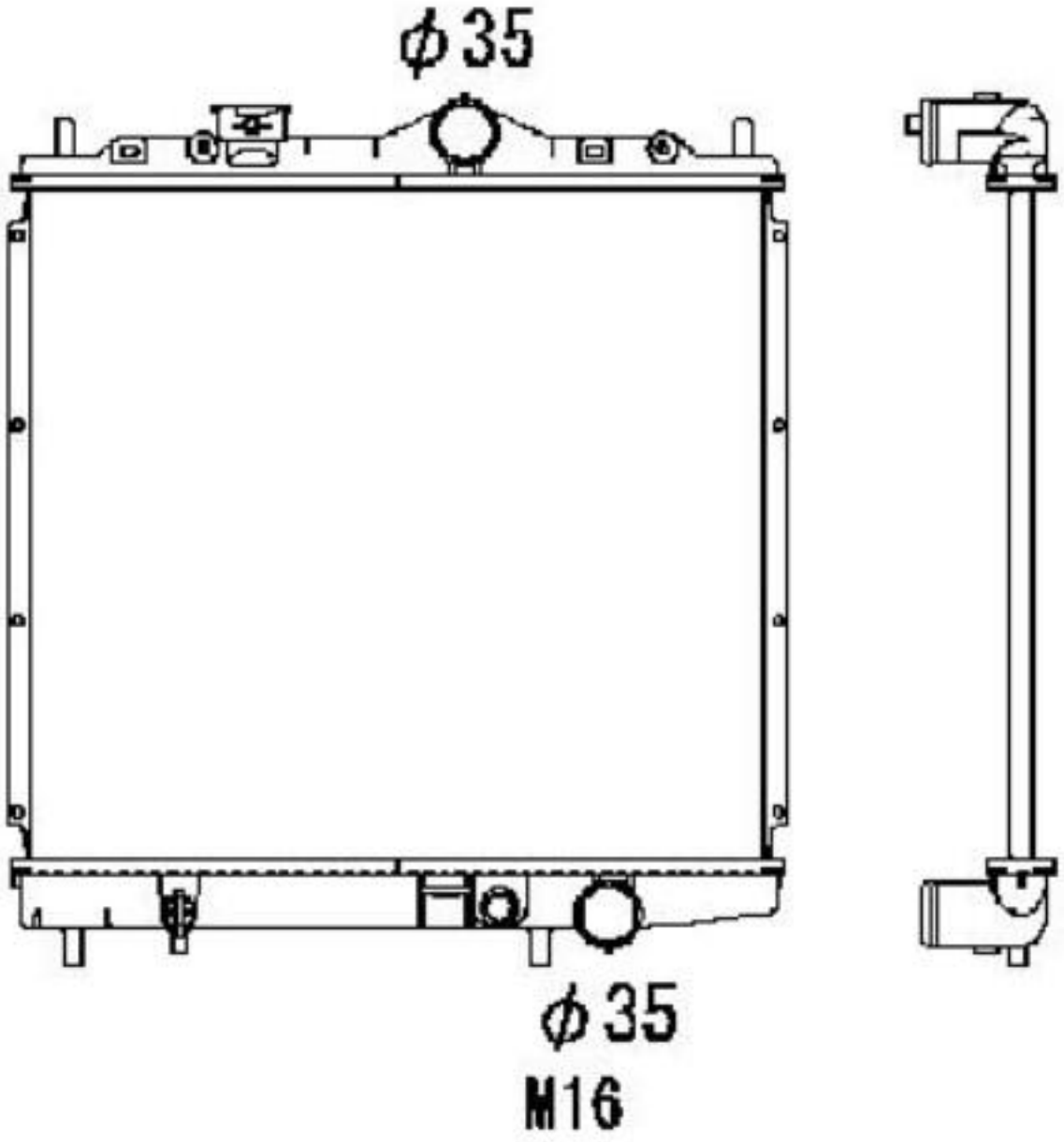
MB660540 MB660558 MB660596