R.D. - DN020 - RADIADOR NISSAN SKYLINE A/T
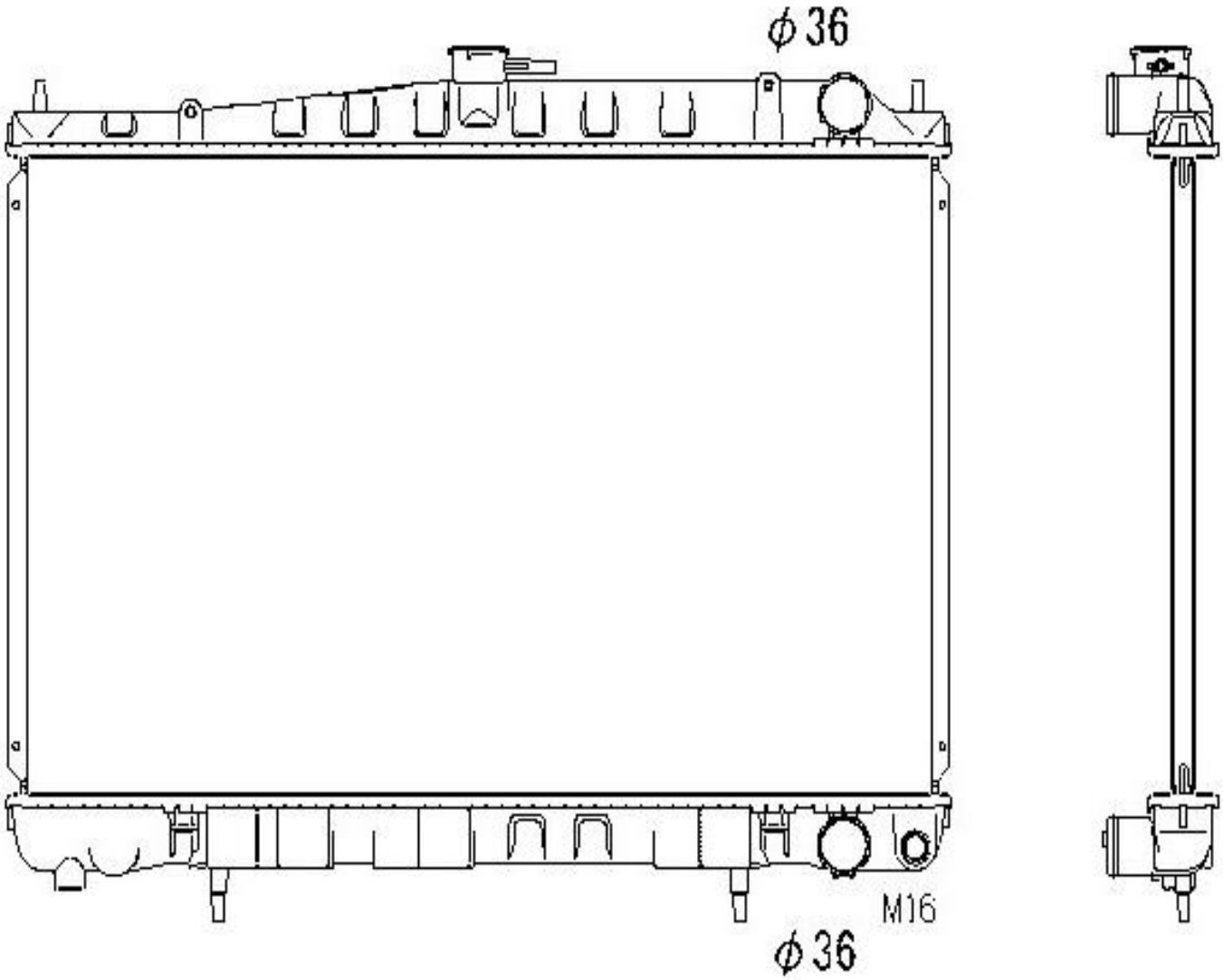
2145021U00